Plastic square shape photoelectric sensors **PSR** series

Features

- ◆18mm threaded cylindrical installation or side installation, it is an ideal substitute for various styles of sensors;
- ◆Compliant with IP67, suitable for harsh environments;
- ◆With 360° visible bright LED status indicator;
- ◆Visible light spot, easy to install and debug.

Part number

NPN	PSR-BC30DNBR-E2	PNP	PSR-BC30DPBR-E2

Technical specifications

Detection type	Diffuse reflection	Anti-ambient light	Anti-ambient light interference < 10,000lx;
Rated distance [Sn]	5...300mm		Incandescent light interference < 3,000lx
Light source	Red LED (660nm)	Indicator display	Green light: power indication, stable indication (blinking
Light spot	18*18mm@30cm		means unstable signal)
Output	NO/NC		Yellow light: output indication, short circuit or overload
Hysteresis range [%/Sr]	3...20%		indication (flashing)
Supply voltage	10...30VDC	Ambient temperature	-15℃…60℃
Load current	≤200mA	Ambient humidity	35...95%RH (non-condensing)
Residual voltage	≤1V	Voltage withstand	1000V/AC 50/60Hz 60s
Distance adjustment	Single-turn potentiometer	Insulation resistance	≥50MΩ(500VDC)
Consumption current	≤20mA	Vibration resistance	10...50Hz (0.5mm)
Circuit protection	Short-circuit, overload, reverse polarity	Degree of protection	IP67
	and zener protection	Housing material	ABS
Response time	≤1ms	Installation method	Composite installation
NO/NC adjustment	NO: 2 feet is connected to the positive	Optical components	Plastic PMMA
	electrode;	Weight	10g
	NC: 2 feet is connected to the negative	Connection type	M12 connector
	electrode;		

Dimensions

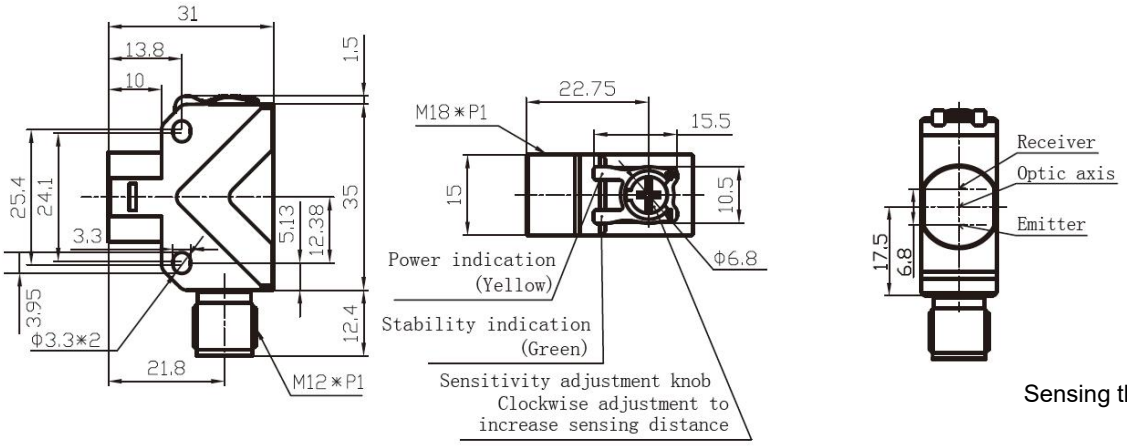

Headquarters: Shanghai Lanbao Sensing Technology Co.,Ltd.
Address: No. 228, Jinbi Road Jinhui Industrial Park Fengxian Area, Shanghai 201404, China
Tel: +86-21-57486188 Fax: +86-21-57486199 market@shlanbao.cn www.lanbaosensor.com
* Lanbao reserves all the rights
Ver .1.1 Y0807

Wiring diagram

NPN

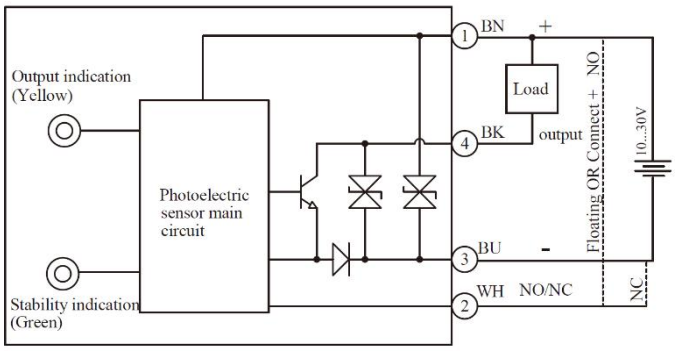

PNP

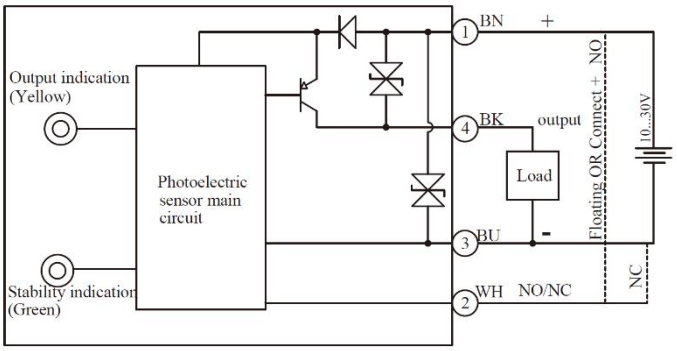

* Lanbao reserves all the rights